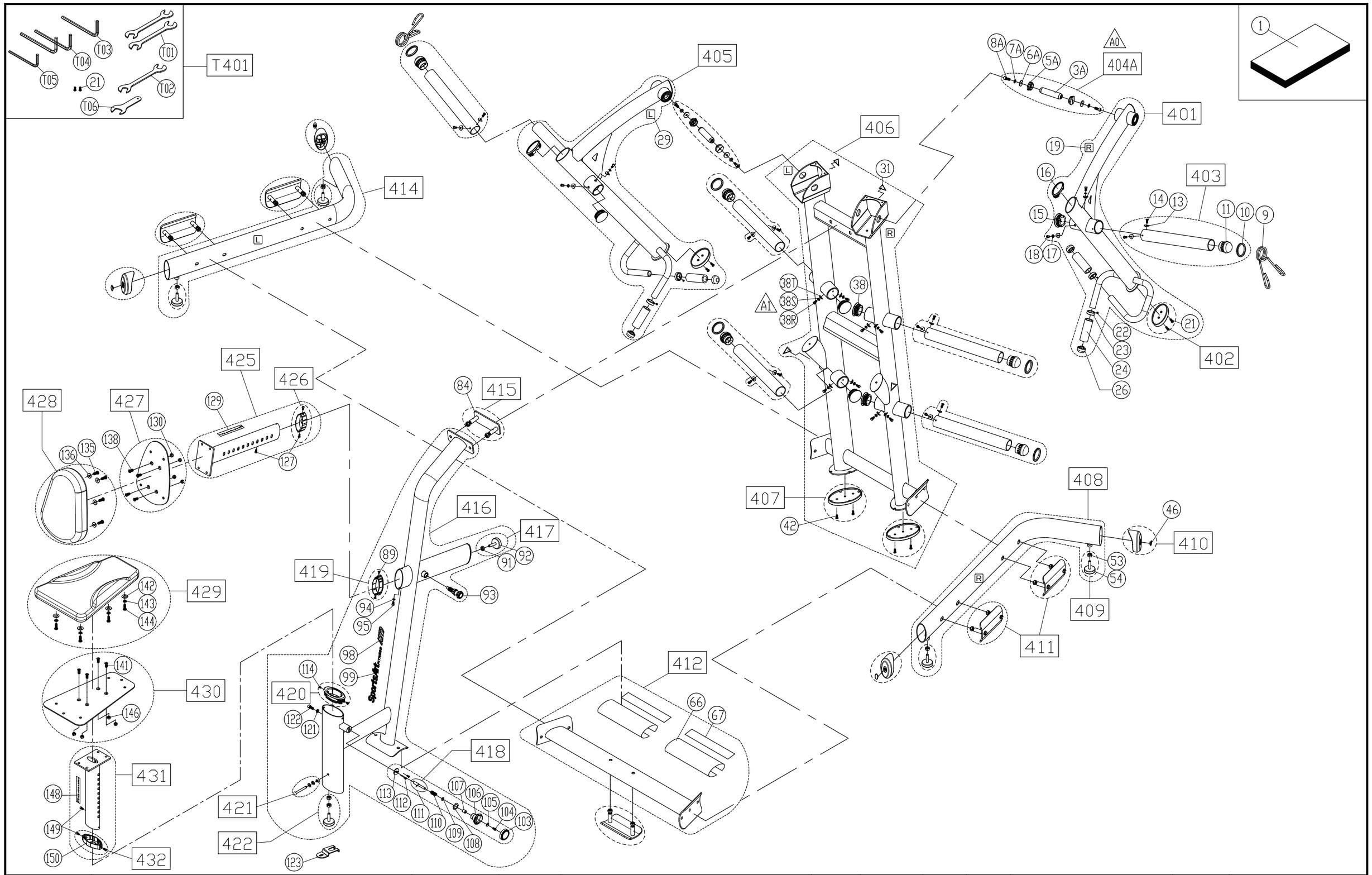

CHANGE DATE	CHANGE DESCRIPTION	CHANGE NO.	NAME
2015.12.24	A0 設變改為 3A 5A 6A 7A 8A 404A，需搭配使用	05-20151209M	鄭宜峰
2016.04.13	A1 406 新增 38R 38S 38T	05-20151207M	鄭宜峰

SportsArt FITNESS

RESTRICTED USAGE ,
PLEASE DON'T FORWARD TO ANYONE WHO ISN'T AUTHORIZED

DRAWN BY		UNITS	MM	SALES BLOW UP DIAGRAM	DIAGRAM NO.	GGZ-F101A-A
		QTY	1	XXX	MODEL	A979
VERIFIED BY		VERSION	A1			
		RATIO	1:15			