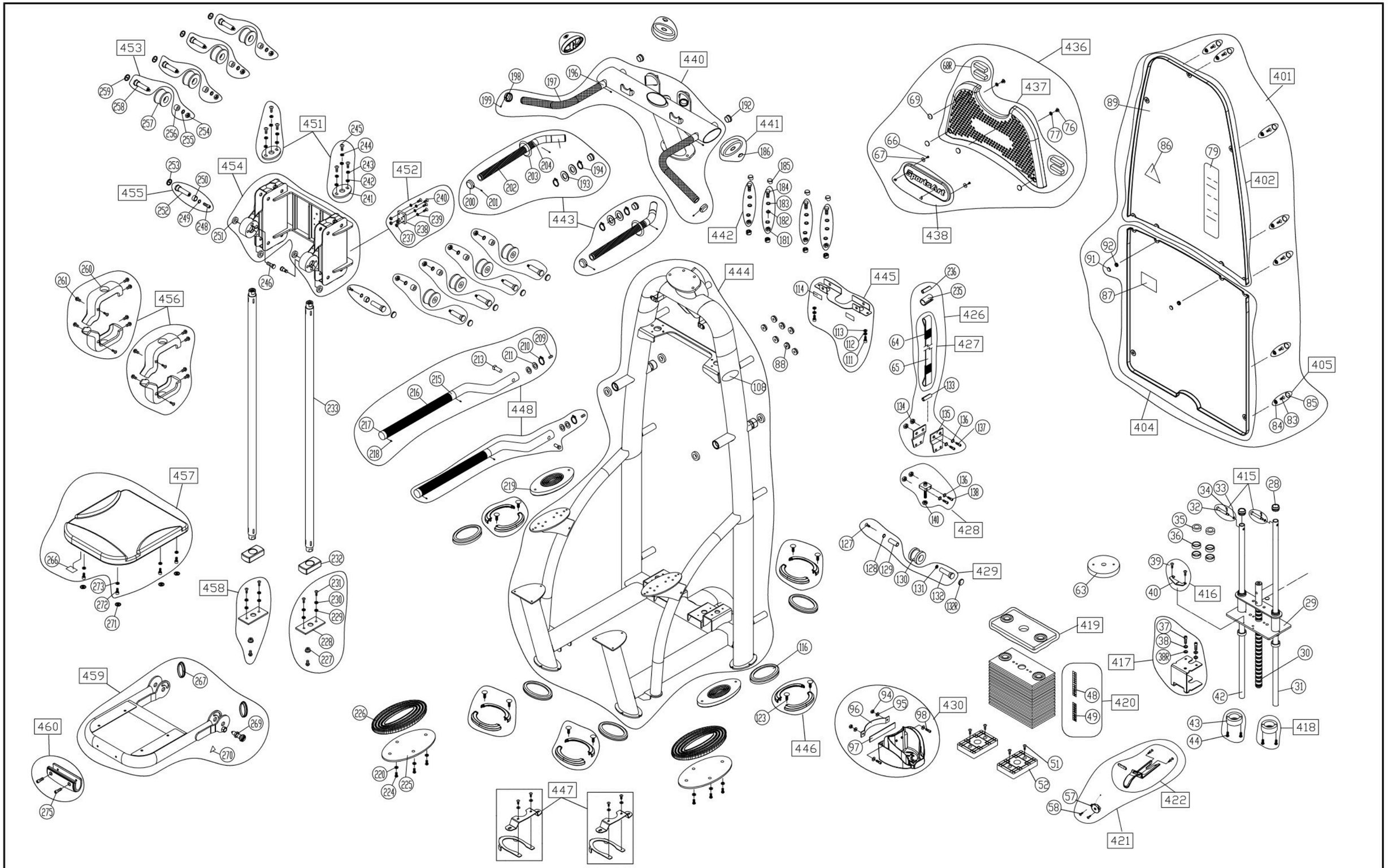

CHANGE DATE	CHANGE DESCRIPTION	CHANGE NO.	NAME							
				SportsArt FITNESS	DRAWN BY		UNITS	MM	SALES BLOW UP DIAGRAM	DIAGRAM NO.	GLH-F101B-A
							QTY	1			N911
			葉沛緹	RESTRICTED USAGE ,	VERIFIED BY		VERSION	A0	XX	MODEL	
				PLEASE DON'T FORWARD TO ANYONE WHO ISN'T AUTHORIZED			RATIO	1:16			