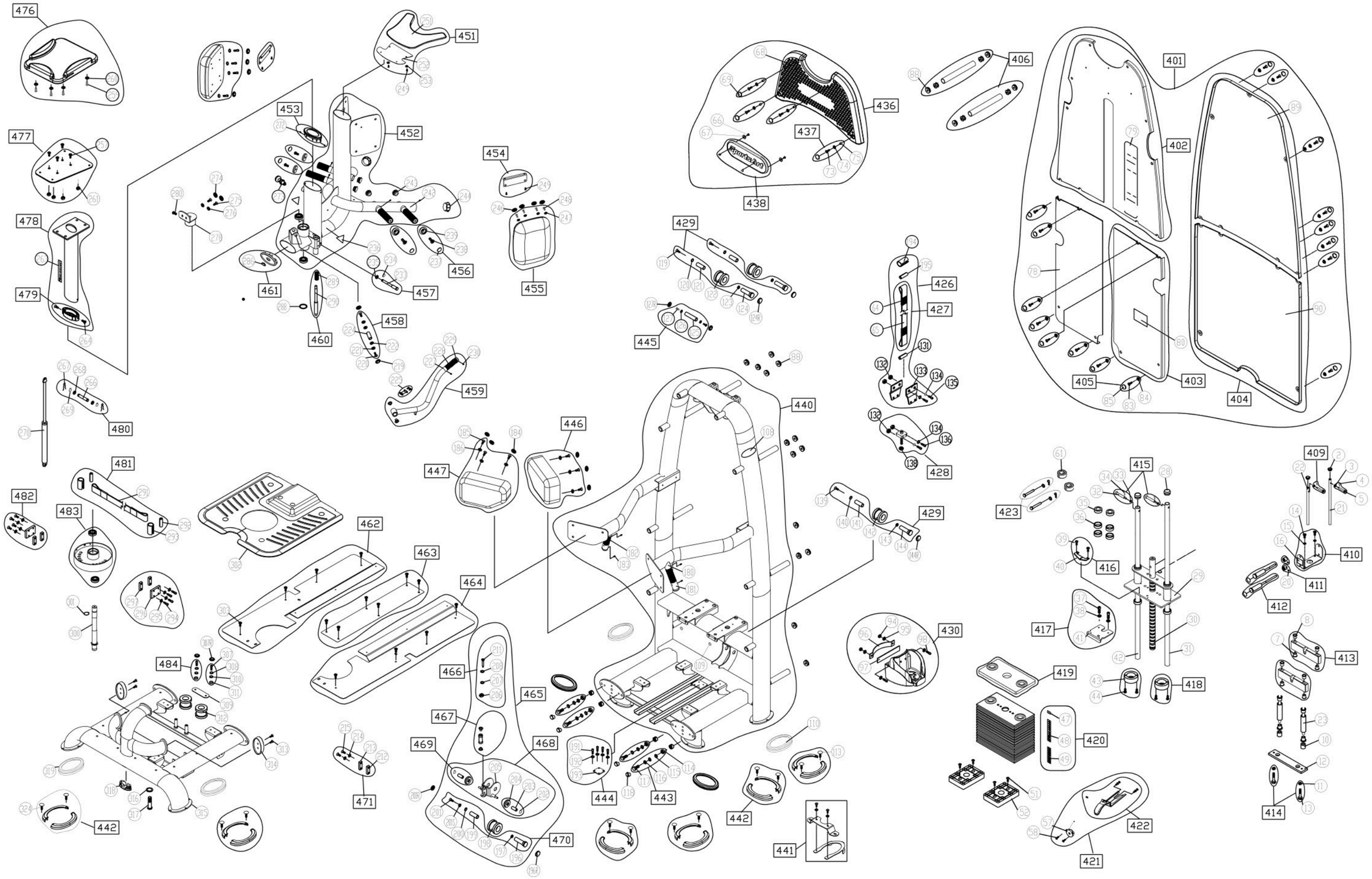

CHANGE DATE	CHANGE DESCRIPTION	CHANGE NO.	NAME							
				SportsArt FITNESS	DRAWN BY		UNITS	MM	SALES BLOW UP DIAGRAM	DIAGRAM NO. GLZ-F101B-A
				RESTRICTED USAGE , PLEASE DON'T FORWARD TO ANYONE WHO ISN'T AUTHORIZED	VERIFIED BY		QTY	1	XX	MODEL N935
							VERSION	A0		
							RATIO	1:19		